REVISIONS			
REV	DESCRIPTION	DATE	APPROVED
A1	Added 9.5 [.38]	11/05/08	R. Smith
A2	Item 1 Material was 18-8 SST		
B1	Spotface Depth .16 was .025	11/06/08	R. Smith
C1	Removed Counterbore Diam. 9.00 X .16 Deep	04/13/09	RJ Ponchione
C2	2X 0.20 was 2X 0.15		
C3	2X 22.68 was 2X 23.58		
C4	22X 9.60 was 22X 9.47		
C5	12X 9.58 was 12X 9.45		
C6	17.50 was 18.45		
C7	Removed (0.16)		
F	24 Etched Lines Changed to 26 Ribs	11/04/09	RJ Ponchione

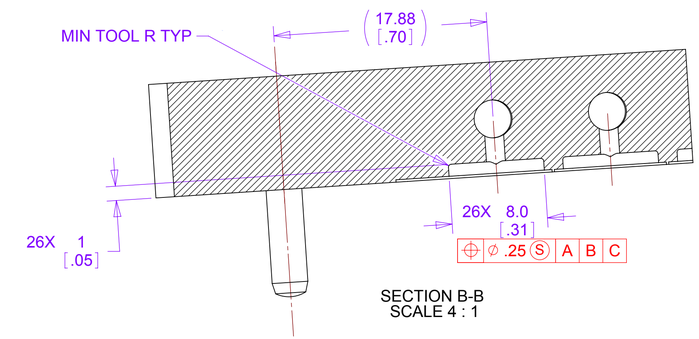

SECTION B-B
SCALE 4 : 1

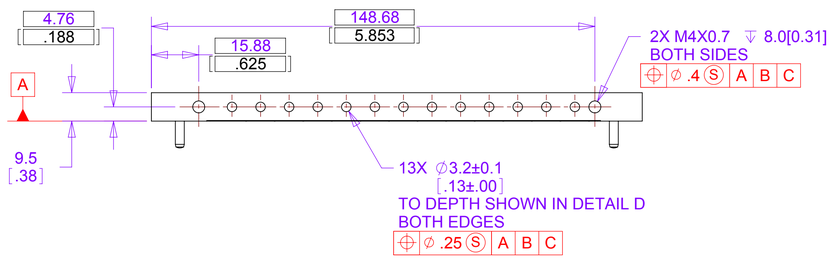

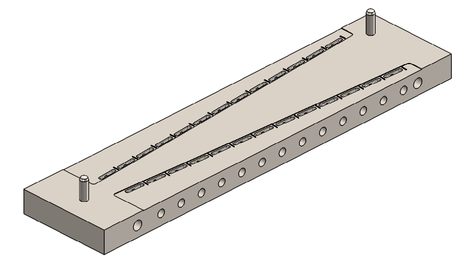

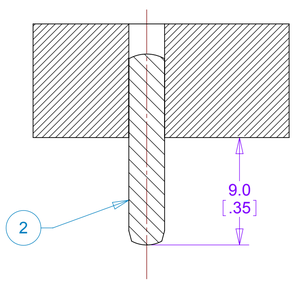

SECTION A-A
SCALE 4 : 1

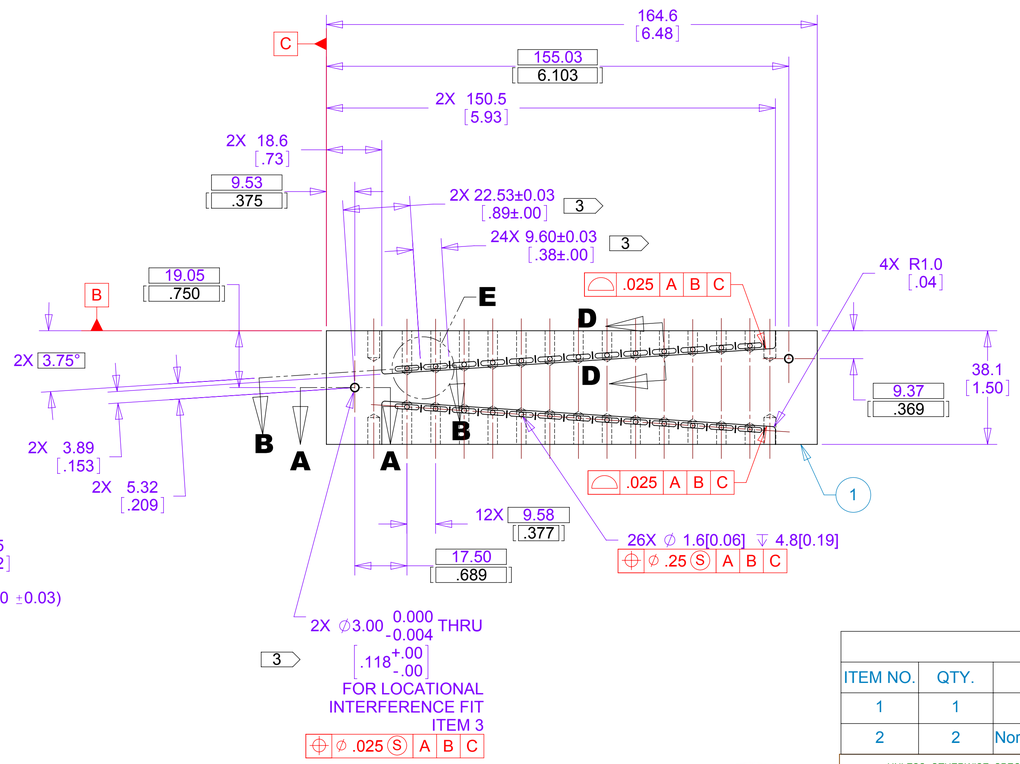

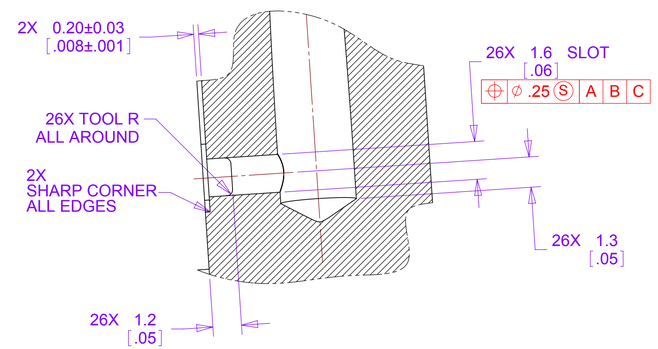

SECTION D-D
SCALE 8 : 1

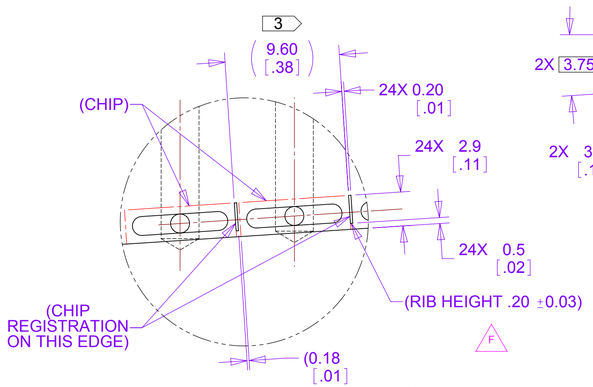

DETAIL E
SCALE 4 : 1

PARTS LIST				
ITEM NO.	QTY.	PART NUMBER	DESCRIPTION	Material
1	1		FVTX Chip Positioning Jig Plate	18-8 or 316 SST
2	2	Nordex EPS-M4-8 or Equiv.	Dowel Pin, 3.0mm X 16mm lg	18-8 SST

NOTES: UNLESS OTHERWISE SPECIFIED

1. ALL DIMENSIONS IN MILLIMETERS [DUAL DIMENSIONS IN INCHES]
2. DIMENSIONS AND TOLERANCING PER ASME Y14.5M-1994

3 INSPECT AND RECORD LOCATION.

HYTEC RELEASED DOCUMENT

UNLESS OTHERWISE SPECIFIED:
DIMENSIONS ARE IN MILLIMETERS
-TOLERANCES-

DECIMALS
X = +/- .5
.X = +/- .1
.XX = +/- .01
.XXX = +/- .001

ANGULAR = +/- 30'

SURFACE FINISH = 250

FINISH

CAD GENERATED DRAWING,
DO NOT MANUALLY UPDATE
DO NOT SCALE DRAWING

	SIGNATURE	DATE
Designer	Roger L. Smith	9/16/2008
Drawn	Roger L. Smith	9/16/2008
Checked	RJ Ponchione	9/16/2008
Engineer	RJ Ponchione	9/16/2008
Approved	RJ Ponchione	9/16/2008

THIRD ANGLE PROJECTION

PART NO. 111-PHX-01-5204-1

HYTEC, INC

TITLE
PHENIX CENTRAL UPGRADE
FVTX DETECTOR ASSEMBLY JIG
CHIP POSITIONING JIG

DWG. NO. 111-PHX-01-5204 SIZE D SHEET NO. 1 of 1

SCALE 1:1 REVISION F

THIS DOCUMENT CONTAINS INFORMATION THAT IS THE PROPRIETARY PROPERTY OF HYTEC, INC.
REPRODUCTION, DISCLOSURE, OR RELEASE TO OTHERS, MANUALLY OR ELECTRONICALLY,
IS STRICTLY PROHIBITED WITHOUT THE PRIOR WRITTEN CONSENT OF HYTEC, INC.